GRAVIS
+ROOF

available colours:

Here's what everybody has been waiting for. Our top-selling heavy-duty mobility scooter **GRAVIS** is finally available with a hardtop roof which will shield you from the sun and non-intensive rainfall. Clear front windshield provides an excellent vision with wind protection for the greatest riding experience. Feel the stability and comfort of this 4-wheeler and don't worry about weather conditions while enjoying your rides.

*The scooter comes **assembled** and **ready to go!***

veleco
luxury electric scooters

info@veleco.pl

+48 34 350 80 44

veleco.eu

SPECIFICATIONS

OVERVIEW
Max user weight: 160 kg / 25.2 st
Scooter weight: 142 kg / 22.4 st
Hill climbing ability: 17°
Maximum range on single charge: 45-60 km / 28-37.3 mi
Speed of response: Low
Maximum speed: 8 mph / 12 km/h
Acceleration system: Right-hand scooter throttle
Seat adjustment: Yes
Suspension: Full
Compliant with DVLA requirments: Yes
Scooter class: Class-3
Vehicle autonomy: Level 0
Optimal air humidity for storage and use: 30%
Working temperature of electronic parts: -10 °C to +40 °C
Turning radius: 220 cm / 86.6”

MOTOR
Power: 1000 W
Voltage: 60 V

BATTERY
Type: Lead-Acid Gel
Capacity: 20 Ah
Voltage: 60 V
Life cycle: 600 full charges
Charge time: ≈8 h

BRAKES
Front: Hydraulic disc
Rear: Drum
Magnetic brake: No

WHEELS
Amount: 4
Type of tyres: Pneumatic tubeless
Size: F 3.00-8” / R 3.00-10”
Tyre pressure: 2.25 bar / 225 kPa / 32.5 PSI

LIGHTS
Low beam headlight: LED (integrated with lamp)
High beam headlight: LED (integrated with lamp)
Tail lights: LED (integrated with lamp)
Daytime running lights: LED (integrated with lamp)
Signal lights: LED (integrated with lamp)
Brake light: LED (integrated with lamp)
Hazard lights: LED (integrated with lamp)

FEATURES
Roof and windshield
Horn
Rearview mirrors
Steering wheel lock
Parking brake
Electric LED display
USB Port
Alarm
Remote control
Comfortable seat

GRAVIS
+ ROOF

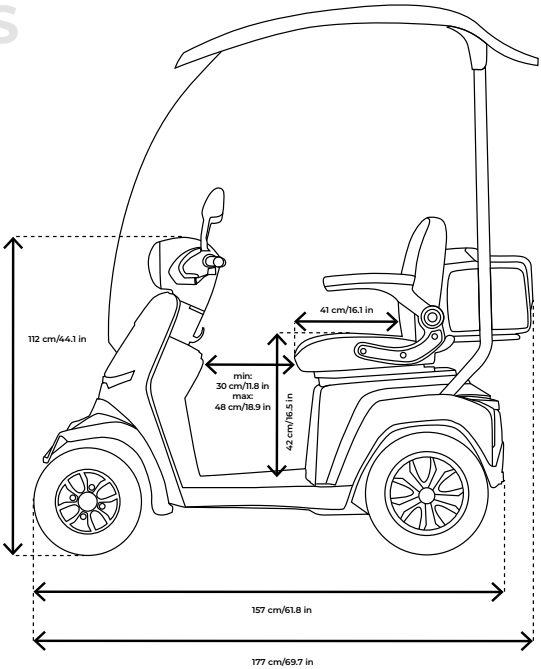
112 cm/44.1 in
41 cm/16.1 in
min:
30 cm/11.8 in
max:
48 cm/18.9 in
42 cm/16.5 in
157 cm/61.8 in
177 cm/69.7 in

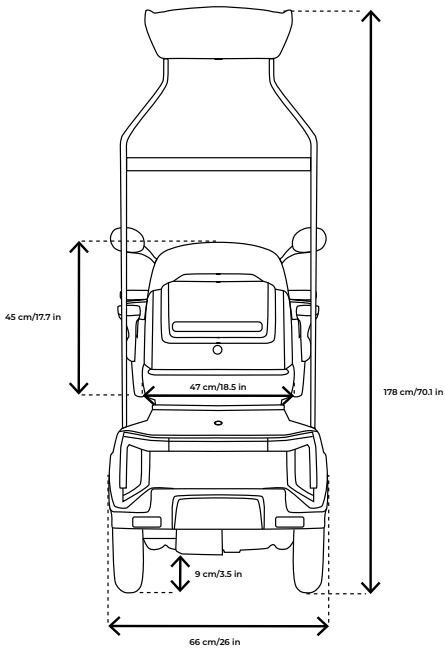
45 cm/17.7 in
47 cm/18.5 in
178 cm/70.1 in
9 cm/3.5 in
66 cm/26 in

info@veleco.pl

+48 34 350 80 44

veleco.eu

veleco
luxury electric scooters